GUIDE

HF633N-037-4-C

1.03

Wuhan Guide Technology Co.,Ltd.

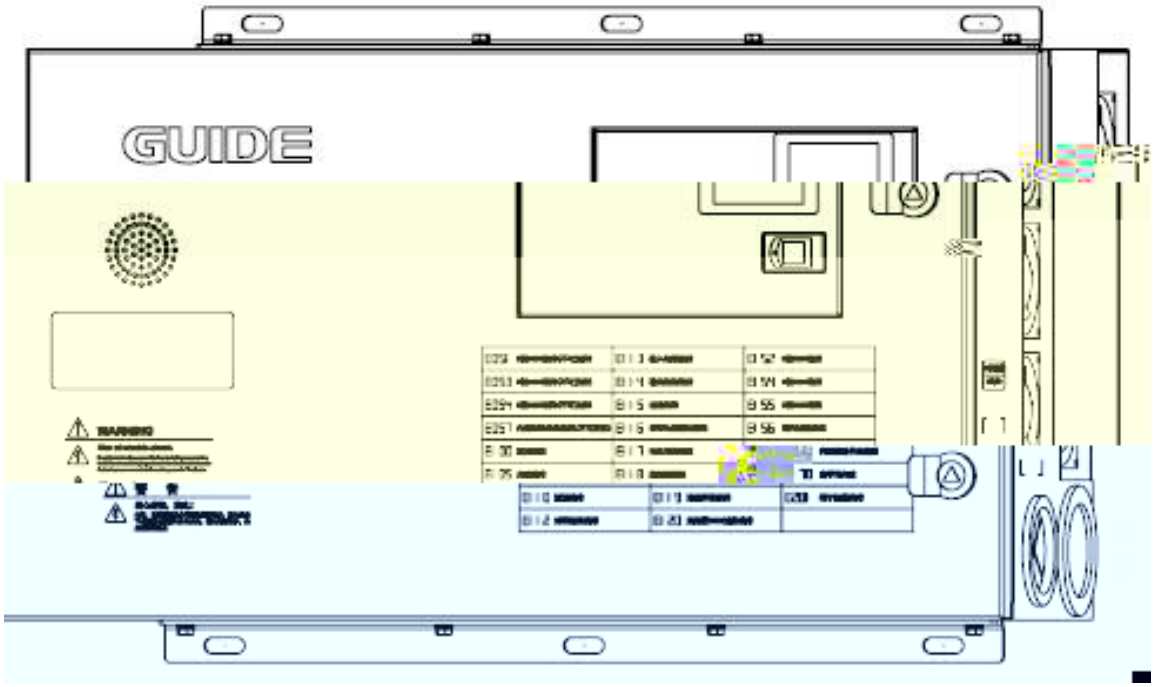

HF633N-037-4-C

1

1.1 1

1.2 3

1.3 3

5

2.1 5

2.2 5

2.3 6

2.4 7

2.5 7

2.6 9

10

3.1 10

3.2 11

3.3 12

3.4 13

3.5 14

3.6 15

20

4.1 20

4.2 21

4.3 21

4.4 23

4.4.1 23

4.4.2 24

4.4.3 24

4.4.4 25

4.4.5 26

4.4.6 27

29

5.1 29

5.2 44

5.3 52

54

6.1 54

6.2 54

A 57

A.1 58

A.2 64

A.3 65
A.4 66
A.5 70
A.6 72
A.7 78
A.8 79
A.9 79
B 80
B.1 80
B.2 81
B.3 83
B.4 84
B.5 87
B.6 88
B.7 88

1.1







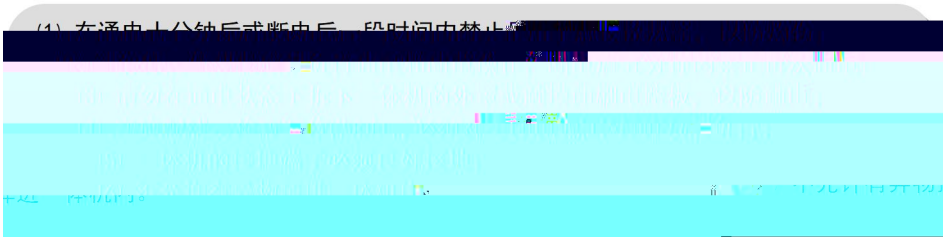

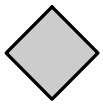

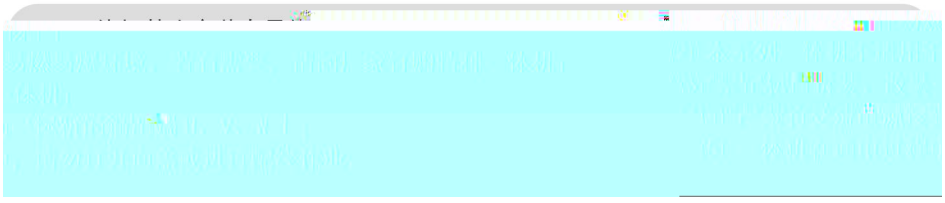

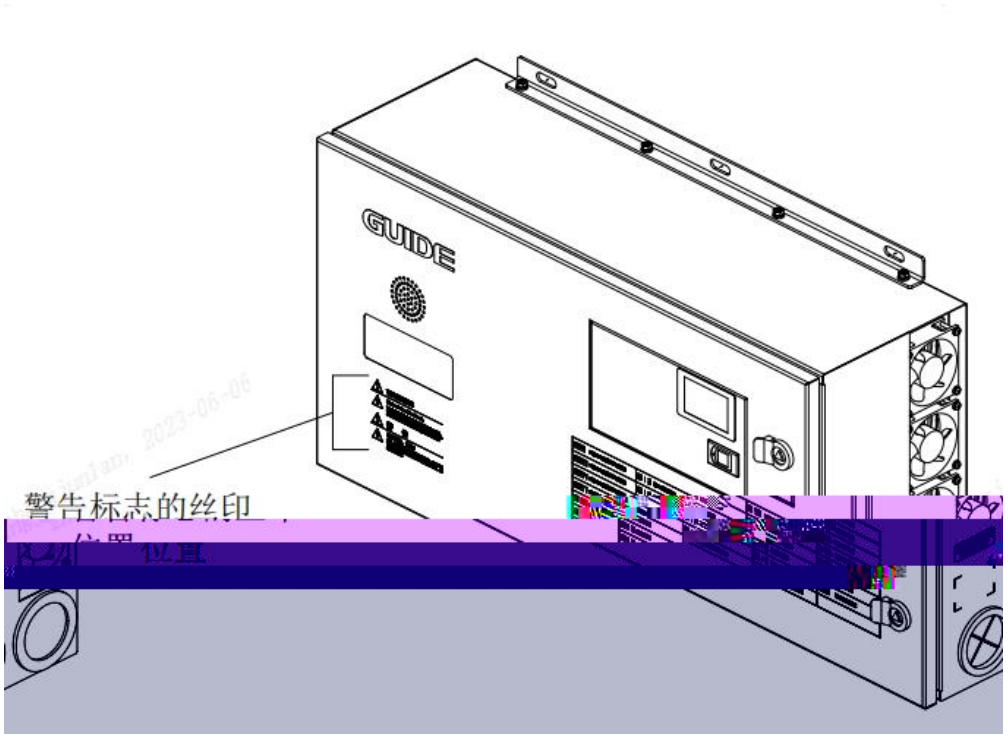

HF633N-037-4-C



1.2

(1)

(2) “ ”

(3)

(4)

LVD	2014/35/EU	EN 61800-5-1
EMC	2014/30/EU	EN 61800-3

1.3

1

RCD

RCM RCD

RCM

B RCD RCD

RCD RCD

2

500V

5MΩ

3

2.1



1.
2.
3.
4.

2.2

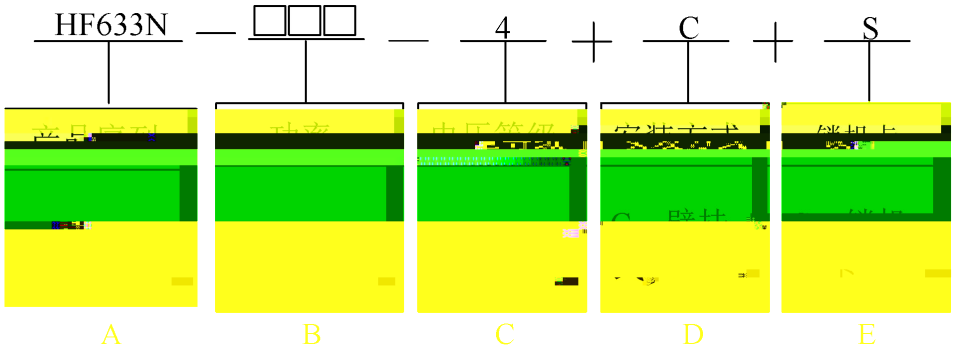

A	HF633N 3
B	3
C	4 400V
D	C
E	+S S

HF633N 37kW

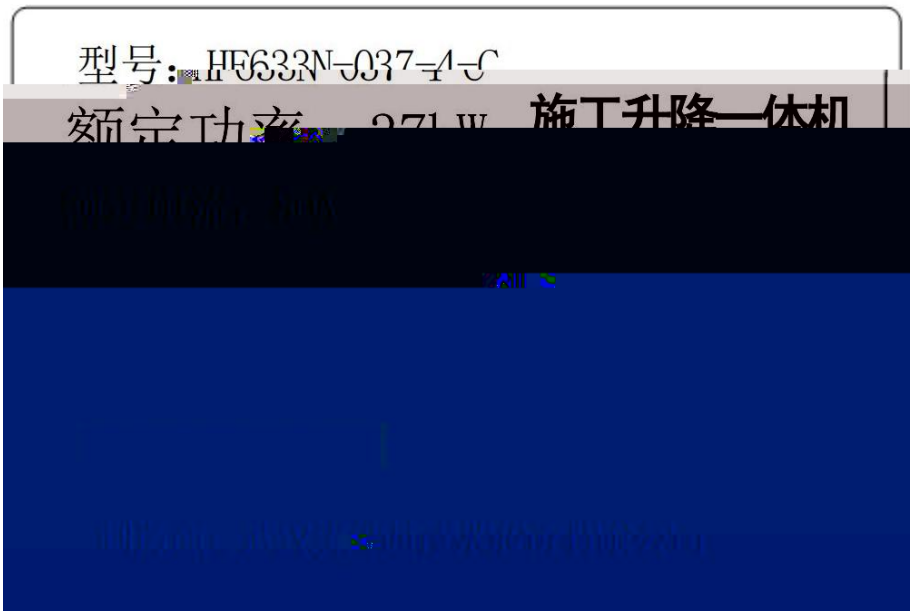

HF633N-037-4-C HF633N

37kW 400V

AC

3PH

380V-480V 50/60Hz

0-480V 0-300Hz

2.3

HF633N

	[A]	[kW]	(kg)
HF633N-037-4-C	80	37	35
HF633N-037-4-C+S	80	37	35.5

2.4

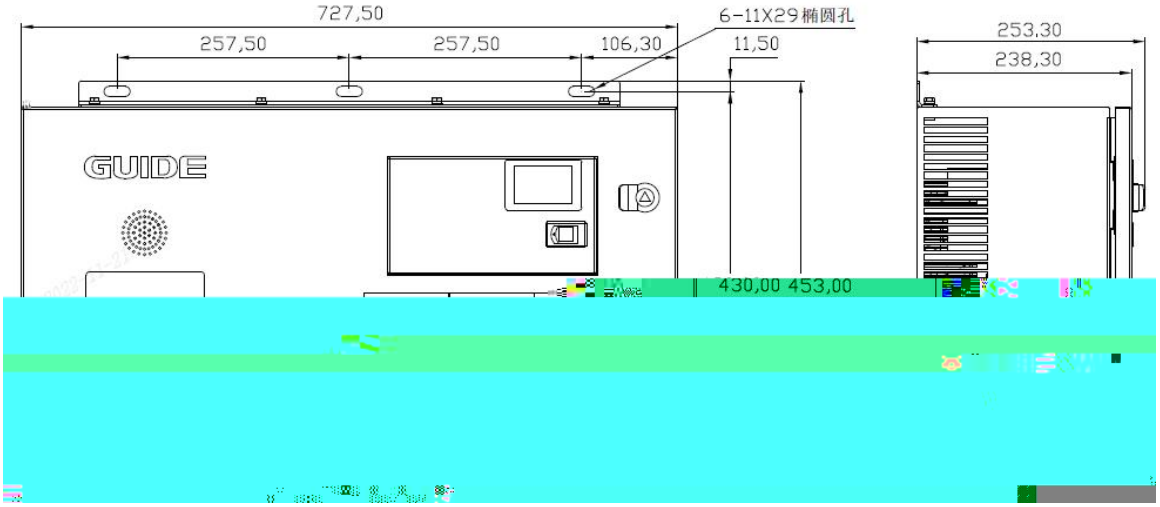

2.5

		380V 480V
		50/60Hz
		-15% +10%
		fLN ± 2 ± 4 ≤ 2 fLN/s
		0
		1
		0 300Hz
		1kHz 10kHz
		0.01Hz x0.1%
		(VC) (SVC) V/F
	V/F	
		300Hz
		0Hz/200%(VC SVC) 0.8Hz/150%(V/F)
		1:500(SVC) 1:1000(VC)
		±0.02% (VC) ±0.2% (SVC) ±0.5%

		(V/F)
		5 150% 1 200% 5
		90% 105%
	LCD	
		1000 1000 100 1% 3000
		-10 +40 40 1 1% 50 -10
		95%RH
		-20 +60 10-30
		>0.80
		96%
		IP20
		2
		≤80db

2.6

1

2

3 “ ”

“ ”

4

5

6 LED

⚠
1. / “ ” / 2. 3. - R S T N - U V W U1 V1 W1 4. 15 5.
⚠
1. 2. 3. 40

3.1

-
- -20 +60
- 0% 95%
-
-
-

1 5

3.2

-
- -10 +40 +40 +50 1
  2% 50
- 95%RH
-
-
-
-
-
-
- 1000 1000 100 1%
  3000

3.3

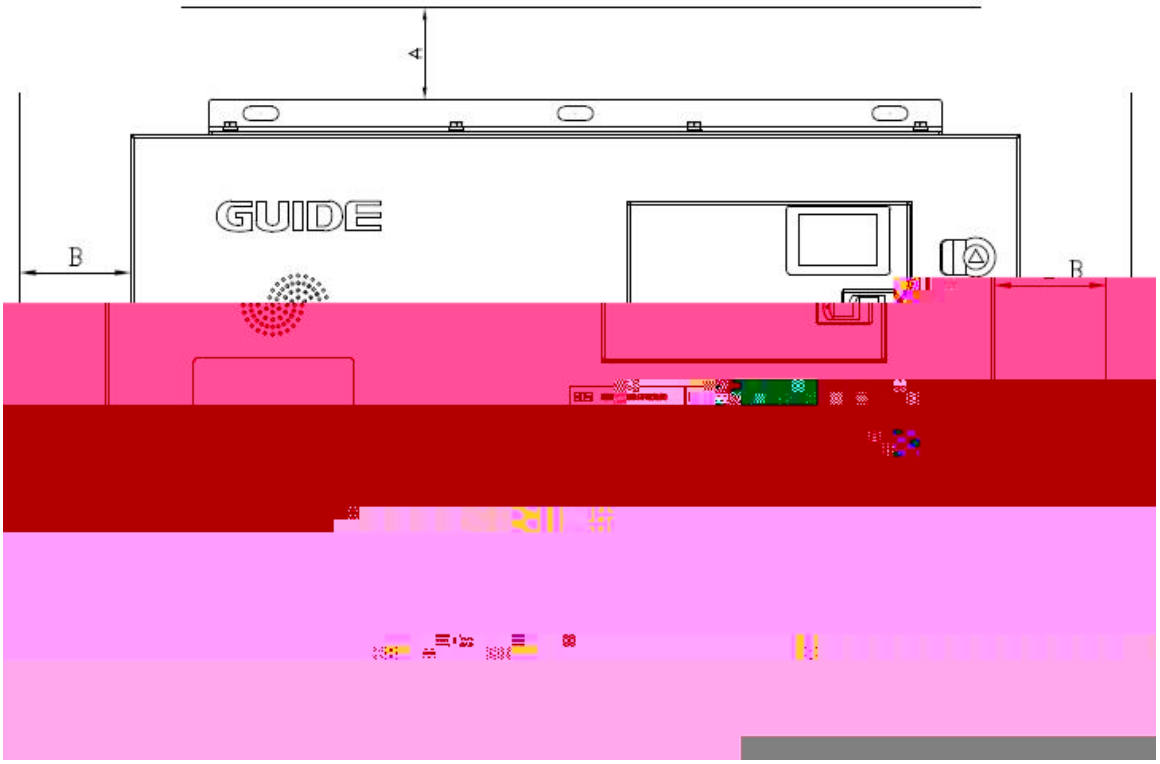

A ≥ 100mm	B ≥ 200mm

3.4

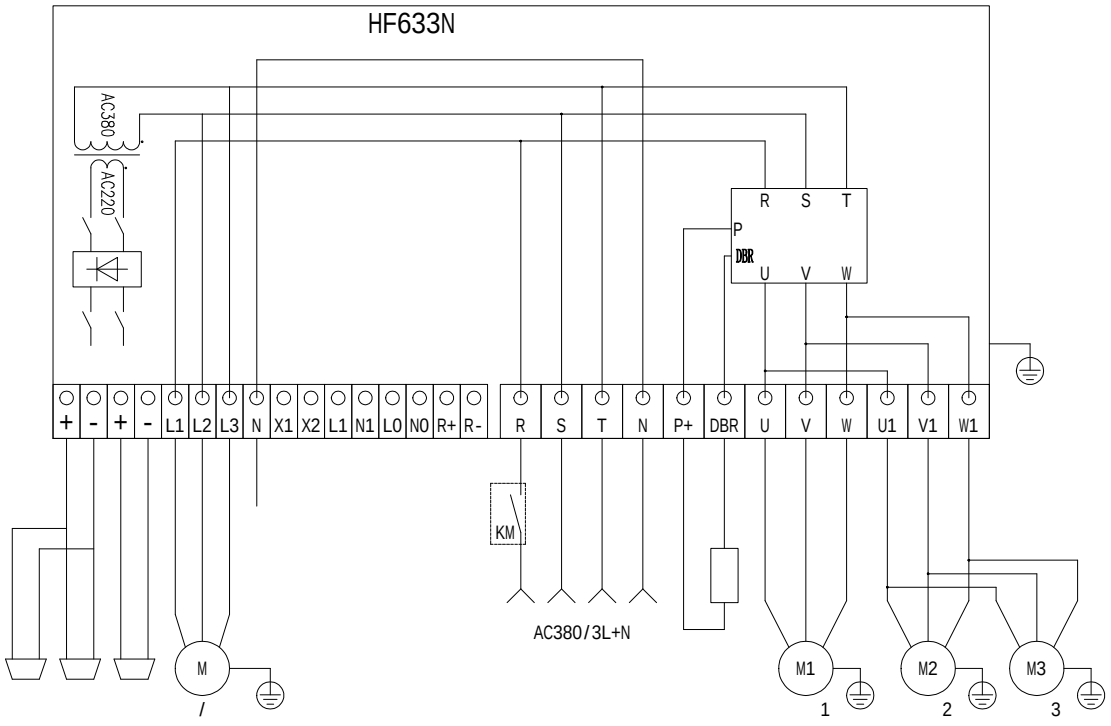
HF633N
AC380
AC220
R S T
P
DBR
U V W
+ - + - L1 L2 L3 N X1 X2 L1 N1 L0 N0 R+ R-
R S T N P+ DBR U V W U1 V1 W1
KM
AC380/3L+N
M
/
M1
1
M2
2
M3
3

R S

3.5

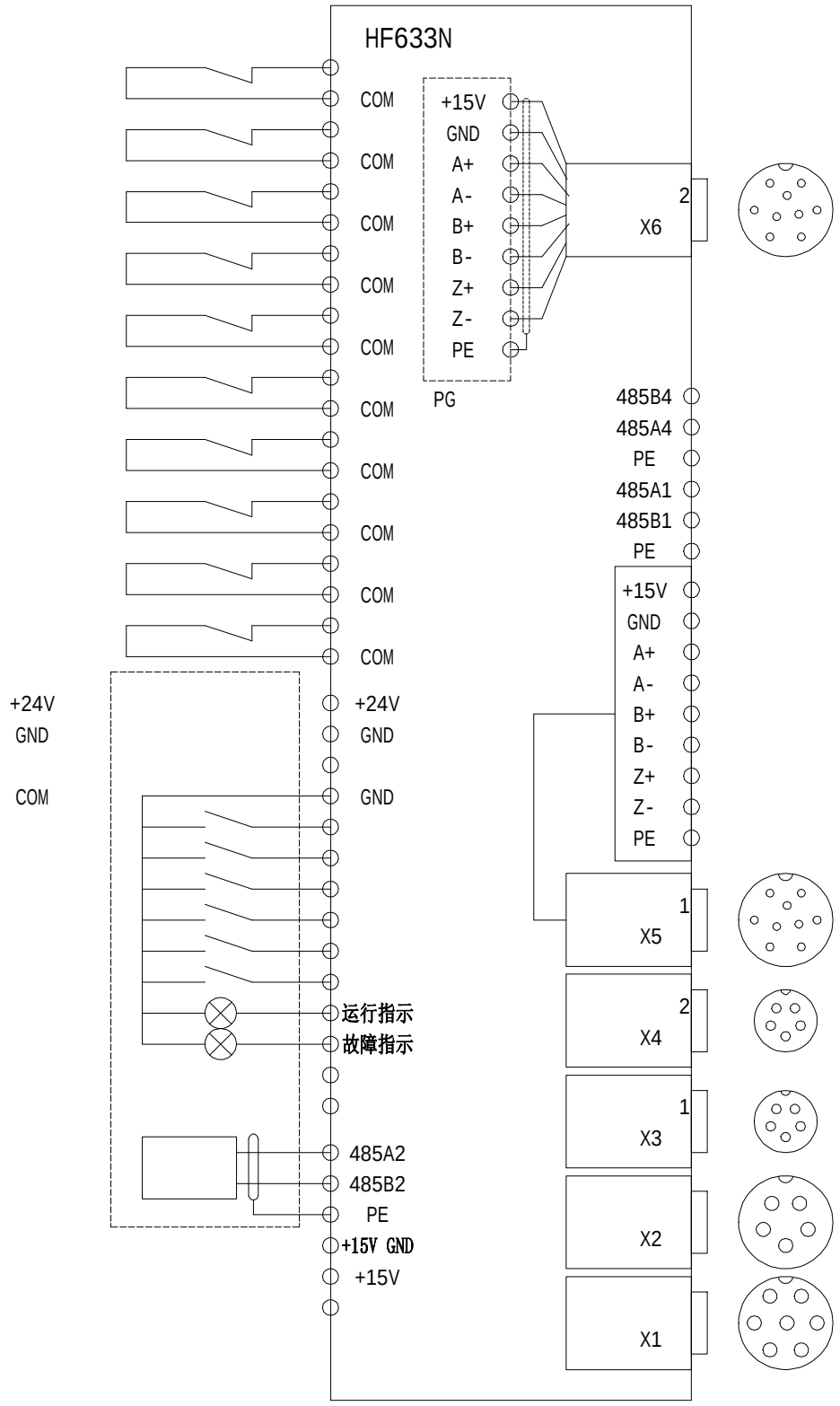

HF633N

1 X5 2 X6

3.6

1

1

1

2

3 AC380~480V 50/60Hz

4 PG PG

5

2

LCD

3

LCD

P16.2			3
P16.3			
P16.4			3
P16.5			
P16.6			
P16.7		120 × P16.5 / P16.6	
P16.9		120 × P16.5 / P16.7	
P16.11		[0]V/F [1] [2]	[1] [2]
P20.16			100 [%]
P20.17			100 [%]
P3.5	6		[1]
P3.6	7		[2]
P3.7	8		[6] 0
P3.8	9		[14]
P3.9	10		[5]
P4.1	2		[3]

P4.2	3		[3]
P4.5	6		[16]
P4.6	7		[2]
P8.16	1	P8.15	3
P8.35	1	P8.34	2
P8.0		[0] [1] [2]DP [3]MODBUS [4]	0
P8.10		[0]I/O [1] 1 [2] 2 [3] [4]DP [5]MODBUS [6]	0
P12.2	1		15Hz
P12.3	2		50 Hz
P12.22			0.1
P12.23			0
P12.24			30
P12.25			30
P12.29			0.4
P7.0	[1]	0~300[%]	180%
P7.4	[1]	0~300[%]	235%
P7.19	[1]	100.0 720.0[%]	120%

4

1

P16.11 [1] [2]

2

LOCAL/REMOTE LOCAL

“ ”

“ ”

3

LOCAL/REMOTE REMOTE “

”

3.75HZ

LCD “ ”

“ ”

4

50%

5

6

5.2.5

4.1

HF633N

4.2

▼

▲

ENTER /RESET

RUN

STOP FWD/REV

LOCAL/REMOTE /

4.3

Drive Monitor	Speed Power	I/O
Parameter Edit	P0 ~ P49	
Reference Set	Global Ref	
Function Set	Tuning I/II/III Parameter Init. Clear Faults System reset Backup/Restore Para	
Error Event Log	Error Log	
Security	Security Edit	Access Level
Display Edit	Display Edit	

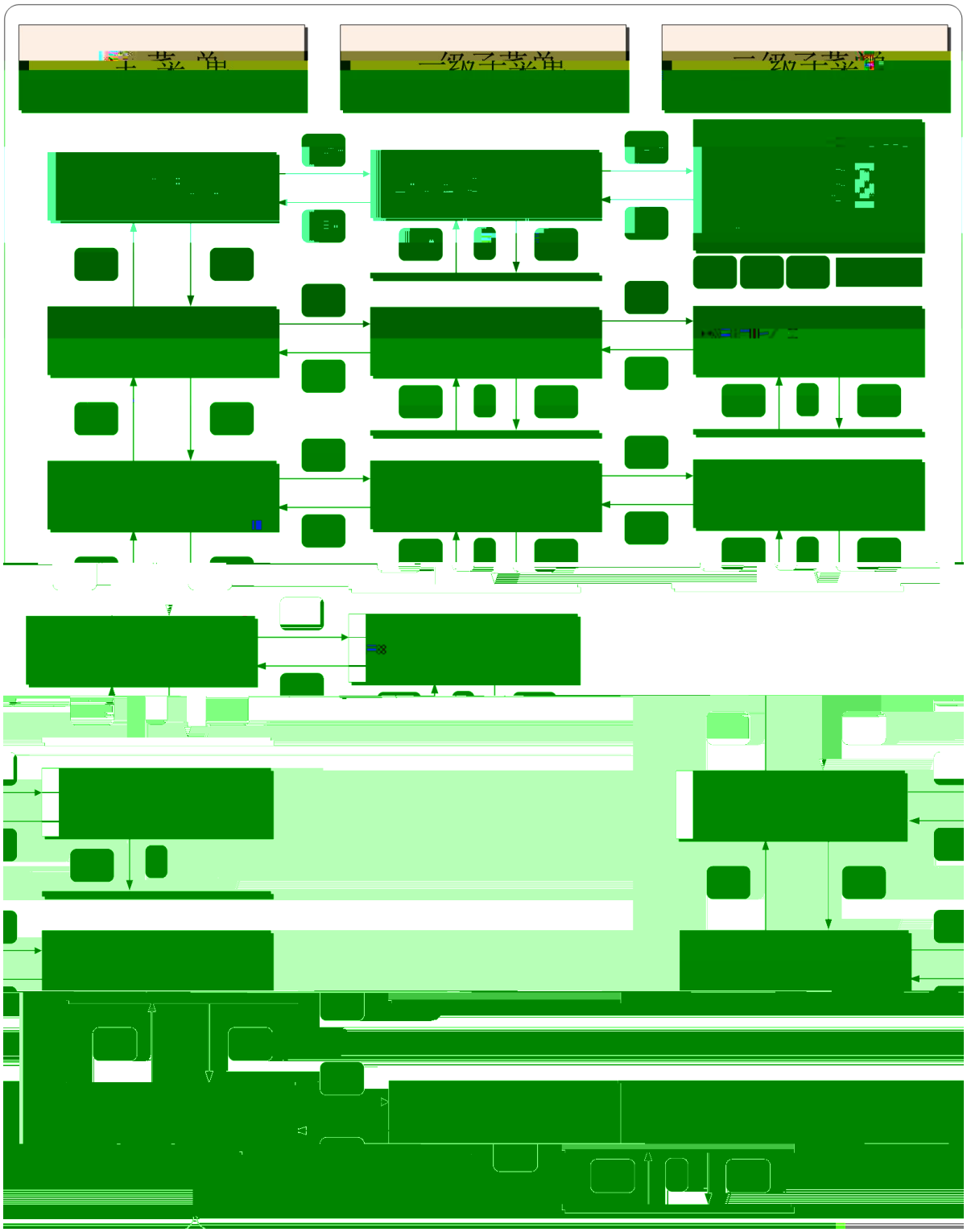

4.4

4.4.1

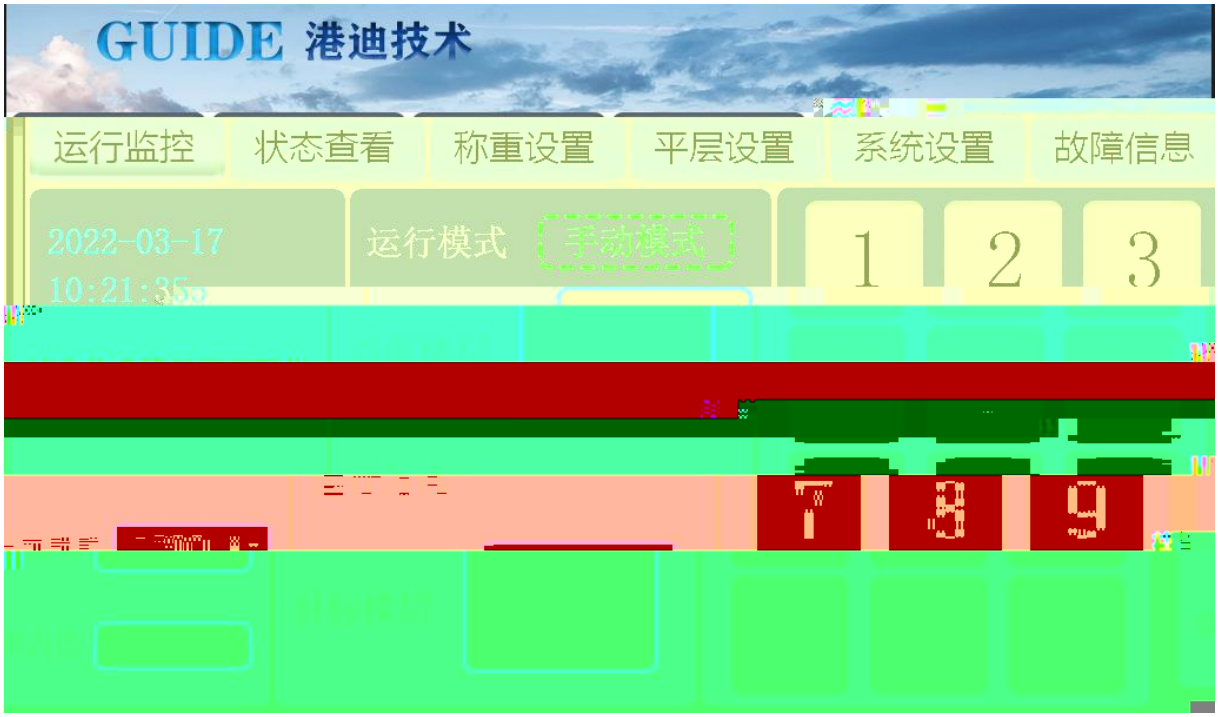

1.

2. “ “

3. -5~90 “ - ”

4. “

” “ ”

5.

/

/


GUIDE 港迪技术
楼层存储信息
楼层
-5
-4
-3
-2
-1
0
1
2
码值
楼层
19
20
21
22
23
24
码值
0
25
26
返回

4.4.5

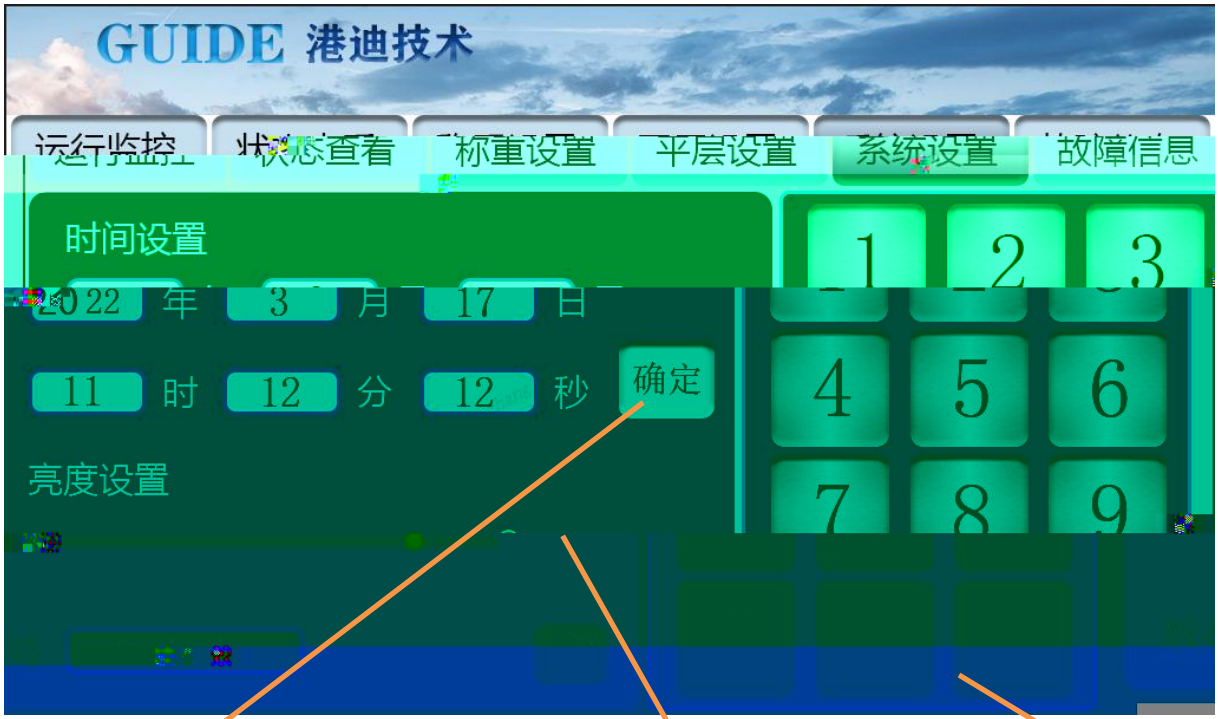
GUIDE 港迪技术
运行监控
状态查看
称重设置
平层设置
系统设置
故障信息
时间设置
2022 年 3 月 17 日
11 时 12 分 12 秒
确定
亮度设置
1
2
3
4
5
6
7
8
9

4.4.6



1.



1.

2.

30S 30S

/ 30S 1S

3.

30S

5.1

5.1.1 P0

P0.0		[0] [1]	0 1	0	
P0.1			0 27	14	
P0.3		[0]50HZ [1]60HZ	0 1	0	
P0.4					

5.1.2 P2

P2.7	MODBUS		0 1	0	1 RS485

5.1.3 P3

P3.0	1		0 32	0	
P3.1	2		0 32	0	
P3.2	3		0 32	0	
P3.3	4		0 32	0	
P3.4	5		0 32	0	

5.1.4 P4

P4.0	1		0 64	0	
P4.1	2		0 64	0	
P4.2	3		0 64	0	3
P4.3	4		0 64	0	
P4.4	5		0 64	0	
P4.5	6		0 64	0	3.6
P4.6	7		0 64	0	2

0		
2		ON
3		5.2
16		5.2

5.1.5 P7

P7.0	[1]	1	0.0 300.0 [%]	180.0 [%]	
P7.4	[1]	1	0.0 300.0 [%]	235.0 [%]	
P7.8	[1]	1	0.0 100.0 [%]	20.0 [%]	
P7.12			600 820	800	

[V] [V]



P7.13

P7.66			-25 150 [V]	100 [V]	
P7.69		[0] [1]	0 1	0	
P7.70			-25 150 [V]	100 [V]	
P7.71	1	[0] [1]	0 1	0	
P7.73		[0] [1]	0 1	0	
P7.74			300 500 [V]	460 [V]	
P7.75			0.0 1000.0 [%]	100.0 [%]	
P7.76			0.00 300.00 [s]	1.00 [s]	
P7.77			0.0 200.0 [%]	15.0 [%]	
P7.94		[0] [1]	0 1	1	

5.1.6 1 P8

P8.0		[0] [1] [2]DP [3]MODBUS [4]	0 4	0
P8.3		[0] [1]	0 1	0
P8.6			0.00 300.00 [s]	0.00 [s]

P8.76

		[5]MODBUS [6]			
P8.15	1		0.0 300.0 [%]	100.0 [%]	5.2
P8.16	1	P8.15	0.0 300.0 [s]	3.00 [s]	5.2
P8.17	2		0.0 300.0 [%]	200.0 [%]	
P8.18	2	P8.15 P8.17	0.0 300.0 [s]	4.00 [s]	
P8.19	3		0.0 300.0 [%]	240.0 [%]	
P8.20	3	P8.17 P8.19	0.0 300.0 [s]	7.00 [s]	
P8.21	4		0.0 300.0 [%]	300.0 [%]	
P8.22	4	P8.19 P8.21	0.0 300.0 [s]	10.00 [s]	
P8.23	5		0.0 300.0 [%]	300.0 [%]	
P8.24	5	P8.21 P8.23	0.0 300.0 [s]	10.00 [s]	
P8.25	6		0.0 300.0 [%]	300.0 [%]	
P8.26	6	P8.23 P8.25	0.0 300.0 [s]	10.00 [s]	
P8.27	7		0.0 300.0 [%]	300.0 [%]	
P8.28	7	P8.25 P8.27	0.0 300.0 [s]	10.00 [s]	
P8.29	8		0.0 300.0 [%]	300.0 [%]	
P8.30	8	P8.27 P8.29	0.0 300.0 [s]	10.00 [s]	
P8.32		[0] [1]PROFIBUS [2]MODBUS [3]	0 3	0	

P8.33			0.1 10.0	1.0	
P8.34	1		0.0 300.0 [%]	100.0 [%]	5.2
P8.35	1	P8.34	0.0 300.0 [s]	3.00 [s]	5.2
P8.36	2		0.0 300.0 [%]	200.0 [%]	
P8.37	2	P8.34 P8.36	0.0 300.0 [s]	4.00 [s]	
P8.38	3		0.0 300.0 [%]	240.0 [%]	
P8.39	3	P8.36 P8.38	0.0 300.0 [s]	7.00 [s]	
P8.40	4		0.0 300.0 [%]	300.0 [%]	
P8.41	4	P8.38 P8.40	0.0 300.0 [s]	10.00 [s]	
P8.42	5		0.0 300.0 [%]	300.0 [%]	
P8.43	5	P8.40 P8.42	0.0 300.0 [s]	10.00 [s]	
P8.44	6		0.0 300.0 [%]	300.0 [%]	
P8.45	6	P8.42 P8.44	0.0 300.0 [s]	10.00 [s]	
P8.46	7		0.0 300.0 [%]	300.0 [%]	
P8.47	7	P8.44 P8.46	0.0 300.0 [s]	10.00 [s]	
P8.48	8		0.0 300.0 [%]	300.0 [%]	
P8.49	8	P8.46 P8.48	0.0 300.0 [s]	10.00 [s]	

5.1.7 1 P12

P12.0		[0] [1]	0 1	1	5.2
P12.1		[0][%] [1][Hz] [2][rpm]	0 2	1	
P12.2	1		0.0 3000.0	10.0	
P12.3	2		0.0 3000.0	20.0	
P12.4	3		0.0 3000.0	35.0	
P12.5	4		0.0 3000.0	50.0	
P12.6	5		0.0 3000.0	50.0	
P12.7	6		0.0 3000.0	50.0	
P12.8	7		0.0 3000.0	50.0	
P12.9	8		0.0 3000.0	50.0	
P12.10	9		0.0 3000.0	50.0	
P12.11	10		0.0 3000.0	50.0	
P12.12	11		0.0 3000.0	50.0	
P12.13	12		0.0 3000.0	50.0	
P12.14	13		0.0 3000.0	50.0	
P12.15	14		0.0 3000.0	50.0	
P12.16	15		0.0 3000.0	50.0	
P12.17	16		0.0 3000.0	50.0	
P12.22			0.0 20.0 [%]	2.0 [%]	5.2
P12.23			0.0 20.0 [%]	0.0 [%]	5.2
P12.24			0.0 200.0 [%]	30.0 [%]	5.2
P12.25			0.0 200.0 [%]	20.0 [%]	5.2
P12.26			0.00 2.00 [s]	0.00 [s]	5.2

P12.27			0.00 2.00 [s]	0.00 [s]	5.2
P12.28			0.00 2.00 [s]	0.07 [s]	5.2
P12.29			0.00 2.00 [s]	0.07 [s]	5.2
P12.32			0.0 20.0 [%]	0.0 [%]	5.2
P12.33			0.0 20.0 [%]	0.0 [%]	5.2
P12.34			0.00 2.00 [s]	0.00 [s]	5.2
P12.35			0.00 2.00 [s]	0.00 [s]	5.2
P12.36			0.00 2.00 [s]	0.50 [s]	5.2
P12.37			0.00 2.00 [s]	0.50 [s]	5.2
P12.40			0.0 100.0 [%]	0.5 [%]	5.2
P12.41			0.00 100.00 [s]	0.20 [s]	5.2
P12.42			0 3000 [s]	300 [s]	5.2

5.1.8 1 V/F P16

P16.0			320 460 [V]	380 [V]	
P16.2			0.0 4000.0 [kW]	[kW]	
P16.3			320 460 [V]	380 [V]	
P16.4			0.0 6500.0 [A]	[A]	
P16.5			0.0 300.0 [Hz]	50.0 [Hz]	

P16.6

P16.33	V/F	V/F	0 6	2	
P16.34	V/F 1		0.0 300.0 [Hz]	5.0 [Hz]	
P16.35	V/F 1		0.0 125.0 [%]	11.5 [%]	
P16.36	V/F 2		0.0 300.0 [Hz]	50.0 [Hz]	
P16.37	V/F 2		0.0 125.0 [%]	100.0 [%]	
P16.38	V/F 3		0.0 300.0 [Hz]	50.0 [Hz]	
P16.39	V/F 3		0.0 125.0 [%]	100.0 [%]	
P16.40	V/F 4		0.0 300.0 [Hz]	50.0 [Hz]	
P16.41	V/F 4		0.0 125.0 [%]	100.0 [%]	
P16.42	V/F 5		0.0 300.0 [Hz]	50.0 [Hz]	
P16.43	V/F 5		0.0 125.0 [%]	100.0 [%]	
P16.44	V/F 6		0.0 300.0 [Hz]	50.0 [Hz]	
P16.45	V/F 6		0.0 125.0 [%]	100.0 [%]	
P16.48		[0] [1]PID 1 [2]PID 2 [3]	0 3	0	
P16.50			0.00 300.00 [s]	0.00 [s]	
P16.51			0.0 150.0 [%]	70.0 [%]	
P16.52			0.00 5.00 [Hz]	0.00 [Hz]	
P16.54			0.00 300.00 [s]	0.00 [s]	
P16.55			0.0 150.0 [%]	75.0 [%]	
P16.56			0.00 5.00 [Hz]	0.00 [Hz]	
P16.59			0.0 1000.0 [%]	100.0 [%]	
P16.60			0.0 1000.0	100.0	

			[%]	[%]	
P16.61			0.0 1000.0 [%]	100.0 [%]	
P16.62			0.0 1000.0 [%]	100.0 [%]	
P16.64	V/F	V/F	0.0 1000.0 [%]	100.0 [%]	
P16.66		V/F	0.0 1000.0 [%]	100.0 [%]	
P16.67			0.0 1000.0 [%]	100.0 [%]	
P16.68			0.0 1000.0 [%]	100.0 [%]	
P16.69			0.0 1000.0 [%]	100.0 [%]	
P16.70			0.0 1000.0 [%]	100.0 [%]	

5.1.9 1 P20

P20.0	[0] [1]		0 1	0
P20.1	[0] [1] 1 [2] 2 [3] [4] P20.3 [5]DP [6]MODBUS [7]		0 7	0
P20.2			0 7	0
P20.8	P20.7 [1]		0.0 300.0 [%]	200.0 [%]
P20.9	˘			

P20.15	[0] [1]	0 1	0
P20.16		0.0 300.0 [%]	100.0 [%]
P20.17		0.0 300.0 [%]	100.0 [%]
P20.18		0.0 300.0 [%]	0.0 [%]
P20.19		0.0 300.0 [%]	0.0 [%]
P20.20	[0] [1]	0 1	0

P20.34		[0] [1]	0 1	0	
P20.35			0.0 100.0 [s]	0.0 [s]	
P20.36			50.0 150.0 [%]	110.0 [%]	
P20.37			0.0 150.0 [%]	100.0 [%]	
P20.38			0.0 100.0 [%]	25.0 [%]	
P20.39			0.0 120.0 [%]	100.0 [%]	
P20.40			0.0 150.0 [%]	100.0 [%]	
P20.41			0.0 150.0 [%]	135.0 [%]	
P20.42		[0] [1]	0 1	1	
P20.43			25 1000 [ms]	75 [ms]	
P20.44			25 1000 [ms]	250 [ms]	
P20.45			0.0 100.0 [%]	22.0 [%]	
P20.46			0.0 100.0 [%]	18.0 [%]	
P20.47			0.0 200.0 [%]	92.0 [%]	
P20.48			0.0 200.0 [%]	87.0 [%]	
P20.49			0.0 150.0 [%]	100.0 [%]	
P20.51			0.0 1000.0 [%]	100.0 [%]	
P20.52			0.0 1000.0 [%]	100.0 [%]	
P20.53	Kp		0.0 1000.0 [%]	100.0 [%]	
P20.54	Ki		0.0 1000.0 [%]	100.0 [%]	

P20.55			0.0 1000.0 [%]	100.0 [%]	
P20.56			0.0 1000.0 [%]	100.0 [%]	
P20.62			0.0 1000.0 [%]	100.0 [%]	
P20.63			0.0 1000.0 [%]	100.0 [%]	
P20.98		( )	0.01 300.00 [s]	0.75 [s]	
P20.99			0.00 10.00 [%]	0.00 [%]	

5.1.10 P26

P26.00		0 1	0~1	0	5.2
P26.01		0 1 2	0~2	0	5.2
P26.02			0~2500kg	800kg	5.2
P26.03			0~500kg	75kg	5.2
P26.04			0~10000kg	2000kg	5.2
P26.05			0.0~500.0%	100.0%	5.2
P26.06			0~10000kg	2000kg	5.2
P26.07			50.0~200.0%	105.0%	5.2

5.2

5.2.1

1

P12.0 [0] [1]

A. [0]

[1] [2] ---1

[6] 1 0 ---2

[7] 2 1 ---3

[8] 3 2 ---4

[9] 4 3 ---5

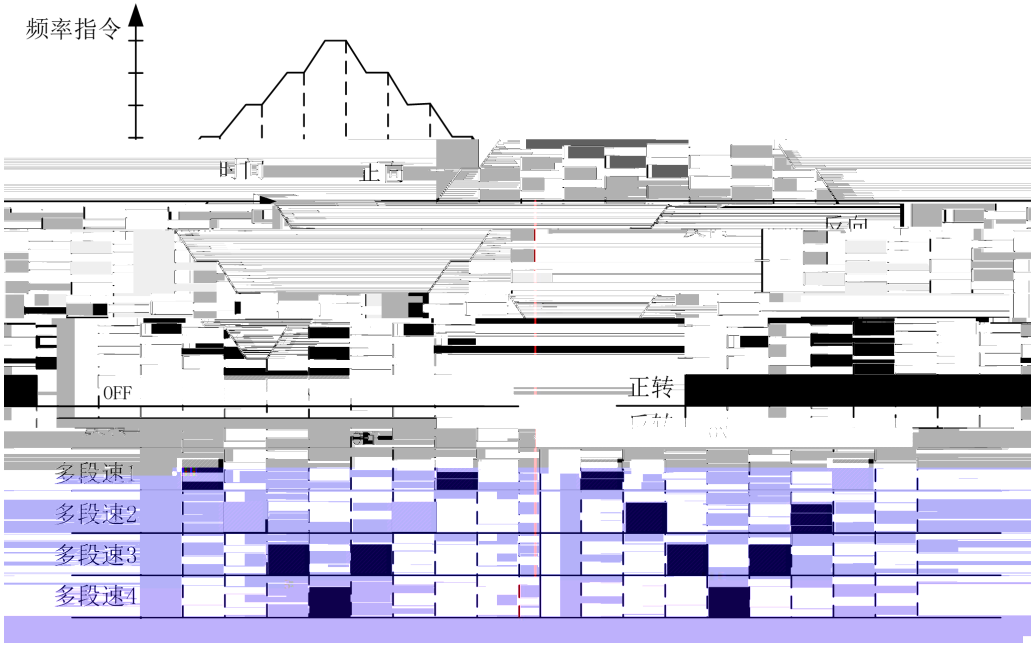

B. [1]

4 16 (8421)

(FORWARD) (REVERSE) P12.2(1)

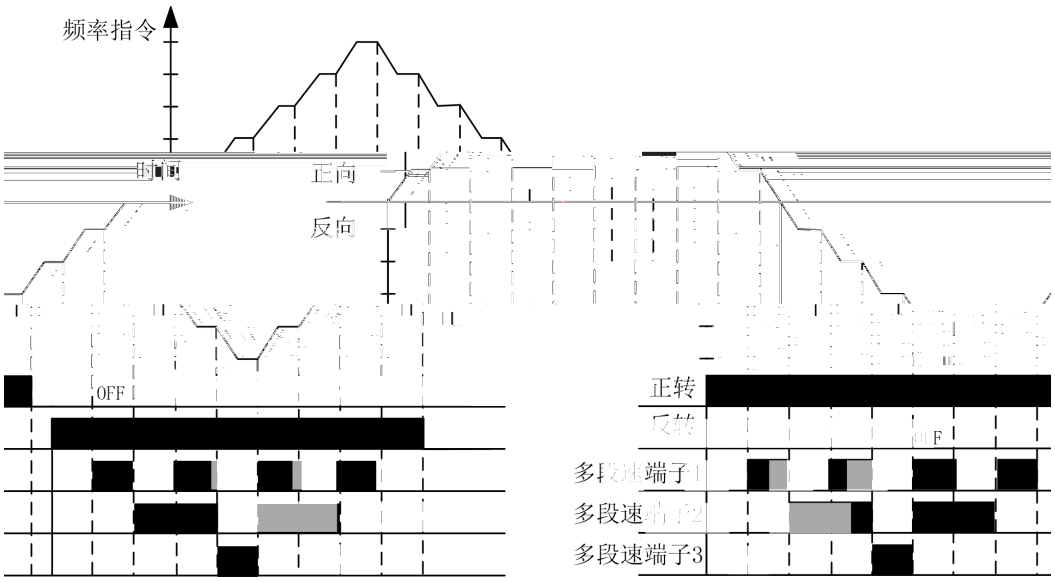

5.2.2

1

P7.0

2

P7.4 P7.4 P16.4

3

P7.8 $I_a + I_b + I_c$ P16.4

$\frac{I_a + I_b + I_c}{} > P$ P

4

P7.12 P7.13 P7.12

P7.13

5

P7.14 IGBT P7.14

P7.15 IGBT P7.15

6

P7.19 P7.20 P7.21 P7.22 P7.19

P7.19 P7.22

7

P7.23 P16.11=1 P7.23

P7.23

8

P7.31 P7.32 P16.11=2

P7.31 100% P7.32

P7.31 P7.32

9

P7.33

P7.33

10

P7.48 P7.50

P12.36　P12.37

P16

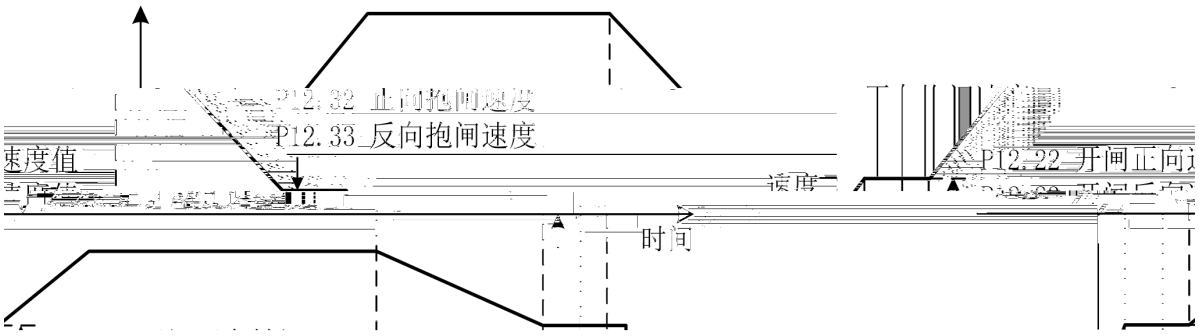

5.2.4

P4.2	1	3		
P4.3	4	16		
P12.40		10%	100% P16.6	
P12.41		0.1s		
P12.42		300s		

P12.42

5.2.5

P26.00		0 1	0~1
P26.01		0 1 2	0~2
P26.02			0~2500kg
P26.03			0~500kg
P26.04			0~10000kg
P26.05			0.0~500.0%
P26.06			0~10000kg
P26.07			50.0~200.0%

1

1 P26.03 kg

2 3s P26.01 1

3 2000KG

P26.04 P26.01 2

4 P26.06

2

“ ”

5.2.6

P20.21		0 “ ”	
P20.22		%	50HZ 85HZ 85/50* 100%=170%
P20.23		P 20.22 10%-50%	2T 1T P20.22 1/2*100= 50 50 P2 0.22
P20.24		100%	
P20.25		100%	
P20.45		6%	
P20.46		5%	
P20.47		90%	
P20.48		77%	
P20.49		100%	
P20.20		1 “ ”	

5.3

P12.04

P12.03

1

2

3

1

2

3

6.1

W01	SYS_NOT_RDY	(Ready)	
W04	REMOTE_EM	[ ]	P3
W06	OT	P7.14( )	
W10	MODBUS MODBUS ALARM	Modbus	Modbus
W15	PARAMETER ERROR		
W18	Temp_Sensing Fail		

6.2

[E051]	U IGBT ERR_UT not reset	IGBT IGBT
[E053]	V IGBT ERR_UT not reset	IGBT IGBT
[E054]	W IGBT ERR_UT not reset	IGBT IGBT

[E119]	SPEED ABNORMAL	P20.14 P20.15 P7.31 P7.32
[E120]	IGBT OT	
[E138]	TEMP_SENSING FAIL	
[E152]	U IGBT PDP [U]	IGBT IGBT
[E154]	V IGBT PDP[V]	IGBT IGBT
[E155]	W IGBT PDP [W]	IGBT IGBT
[E156]	Hardware OC	
[E157]	PDP [DB]	
[E170]	MOTOR TUNING FAIL	P7.33
[E201]	REMOTE_EM	[ ] P3
[E202]	Modbus MODBUS EMERGENCY	Modbus CW0.4
[E204]	DI ERR DUPLICATE DI SET	DI
[E210]	Panel Error	
[E220]	CRC MEMORY CRC ERR	
[E221]	PARAMETER ERROR	

A

	CZT200( )	
	CZT300( )	CZT200
	GD300-NP31K	
	GD300-NP31	
	ZMHBX-3t ZMHBA-3t-GX12-5P	
	GDHF630N4PG01A1	
	LY-1X	CZT300
	GDHF-WP03	
	ENC-01-GX	
	WBSJ2020-0312-2 16Ω/25kW	37kW
	BZRL-15/25KW	37kW
	10.10.A36.03.XS00	BZRL-15/25KW
	22.10.A36.96.200	

A.1



CZT100

CZT100

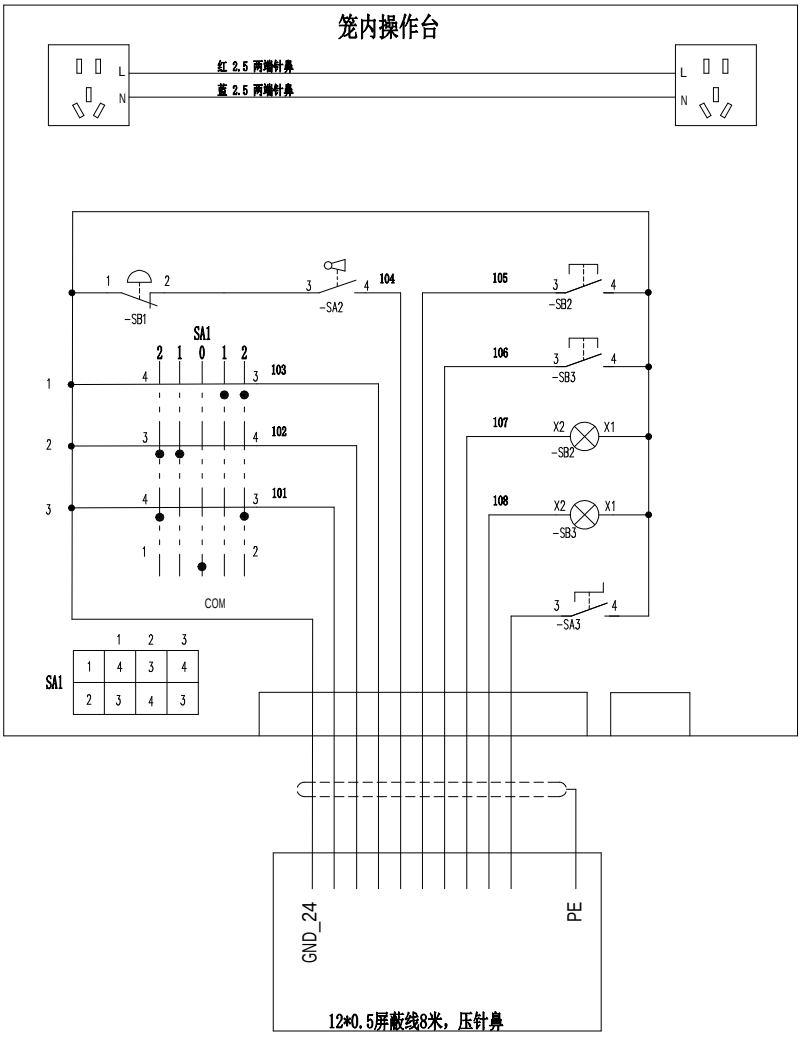

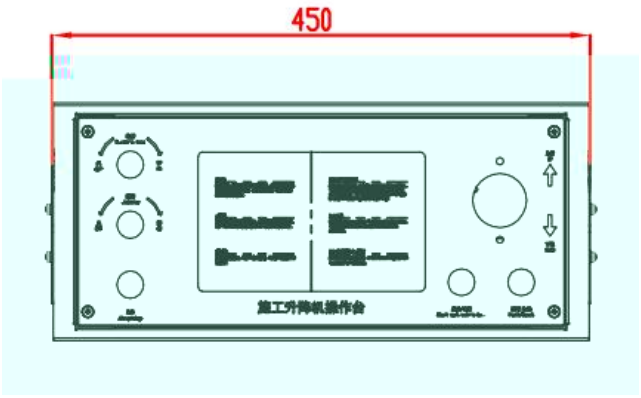

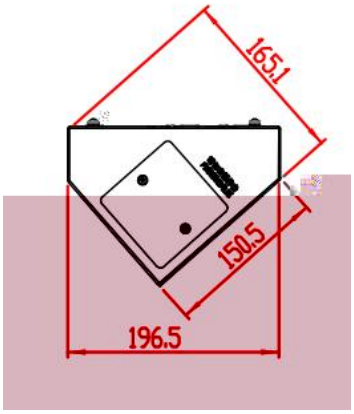

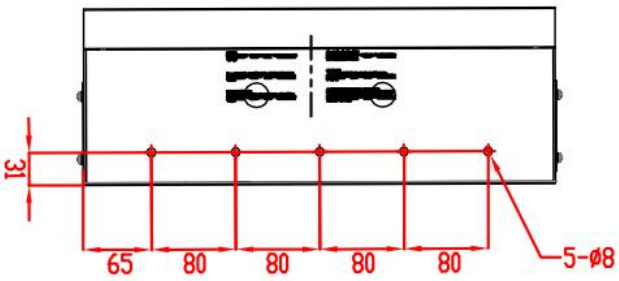

CZT200



CZT200 CZT100

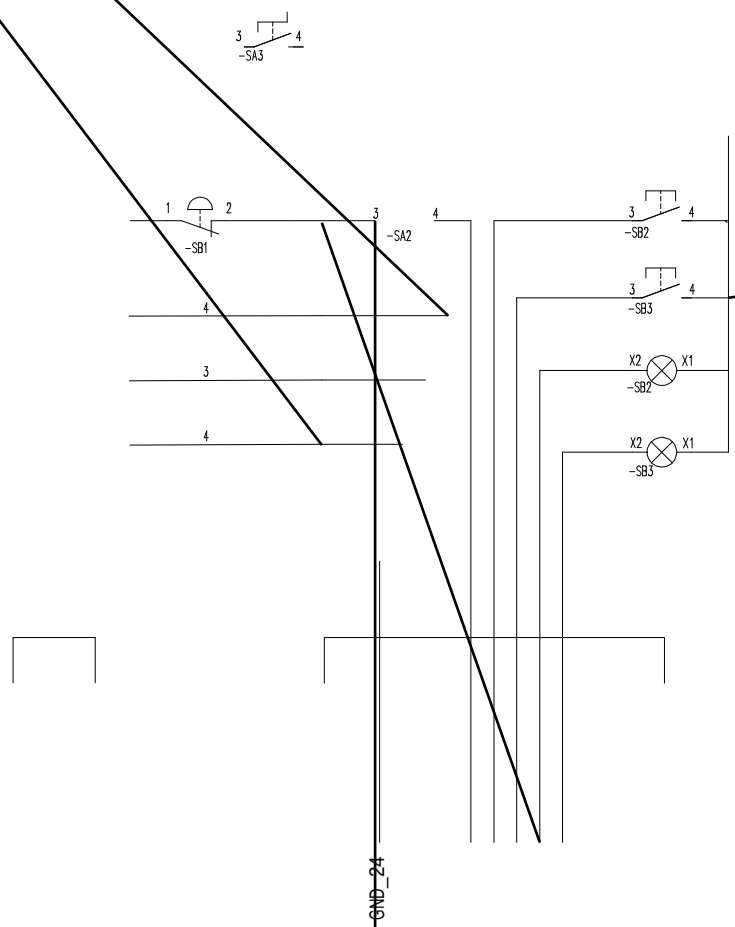
3
4
-SA3
1
2
-SB1
3
-SA2
4
3
4
-SB2
3
4
-SB3
4
3
4
X2
X1
-SB2
X2
X1
-SB3
GND_24

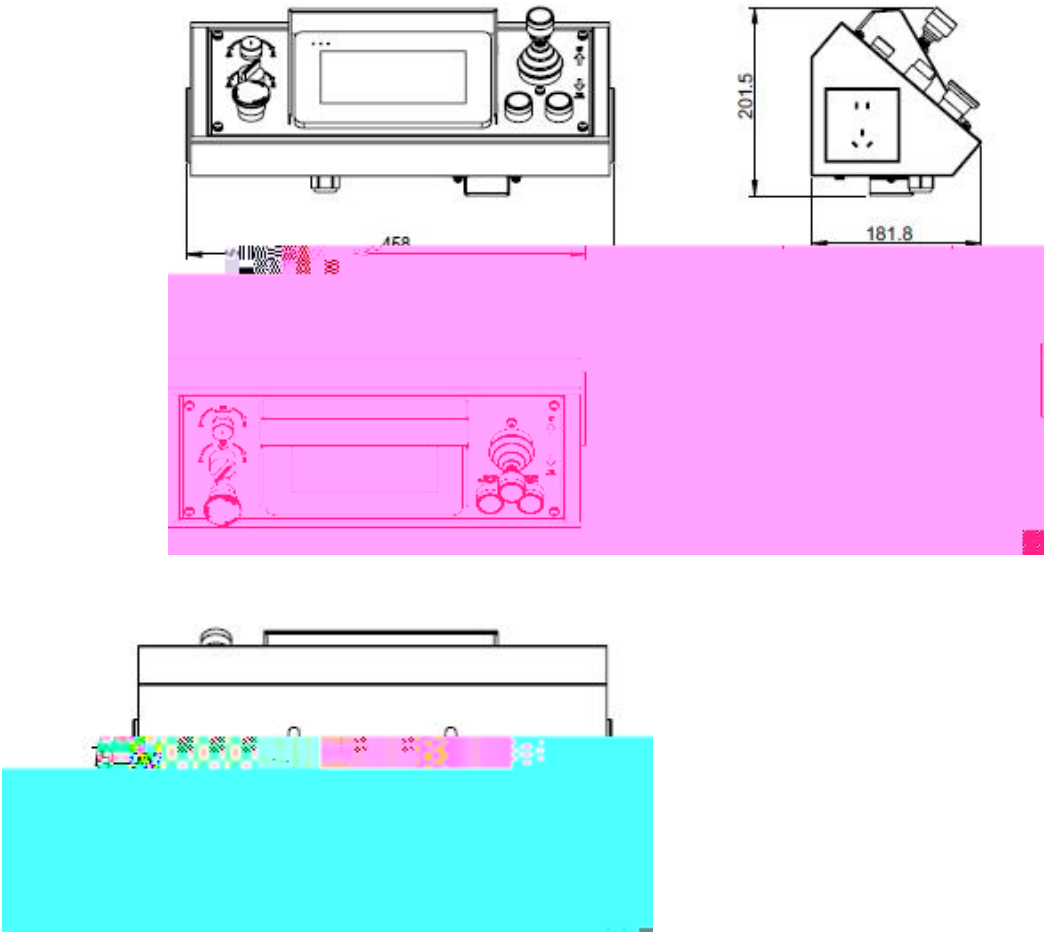
201.5
181.8

CZT300



CZT300 CZT200

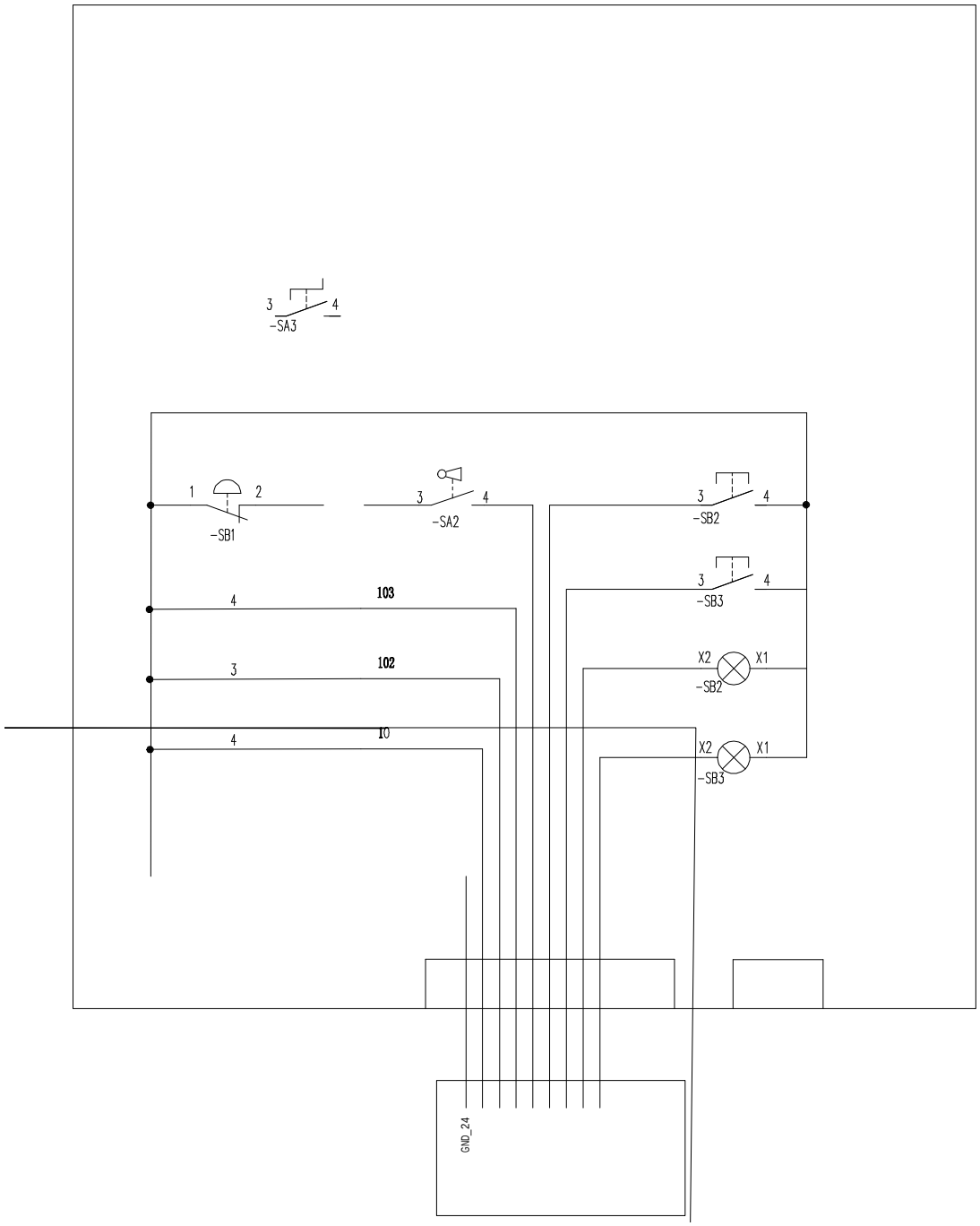
3
4
-SA3
1
2
-SB1
3
4
-SA2
3
4
-SB2
3
4
-SB3
4
103
3
102
4
10
X2
X1
-SB2
X2
X1
-SB3
GND_24

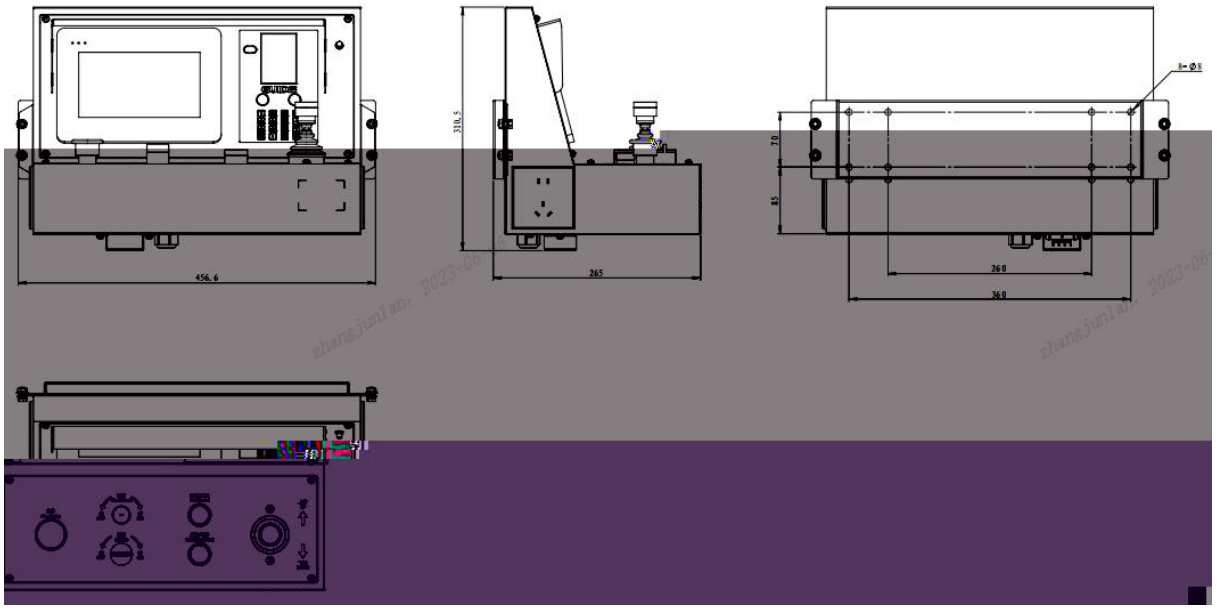

A.2



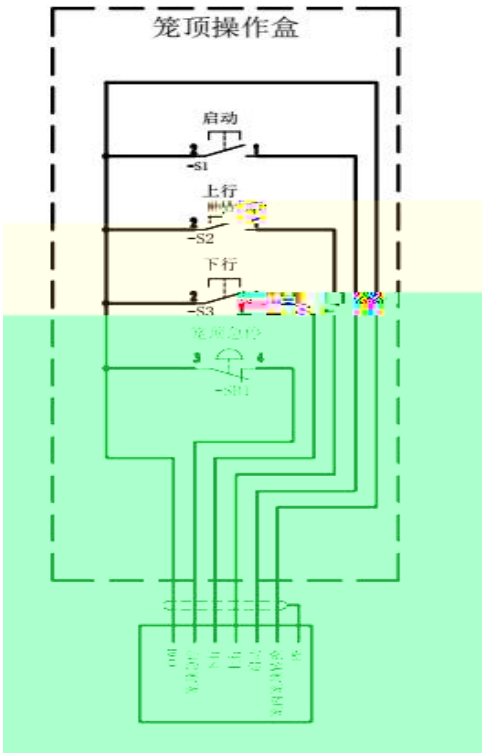

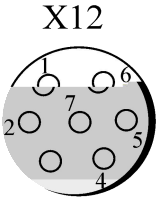

1			
2			
3		COM	
4	COM		
5	PE		

A.4

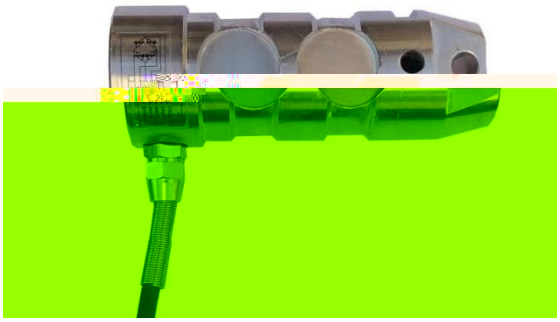

ZMHBA-3t-GX12-5P

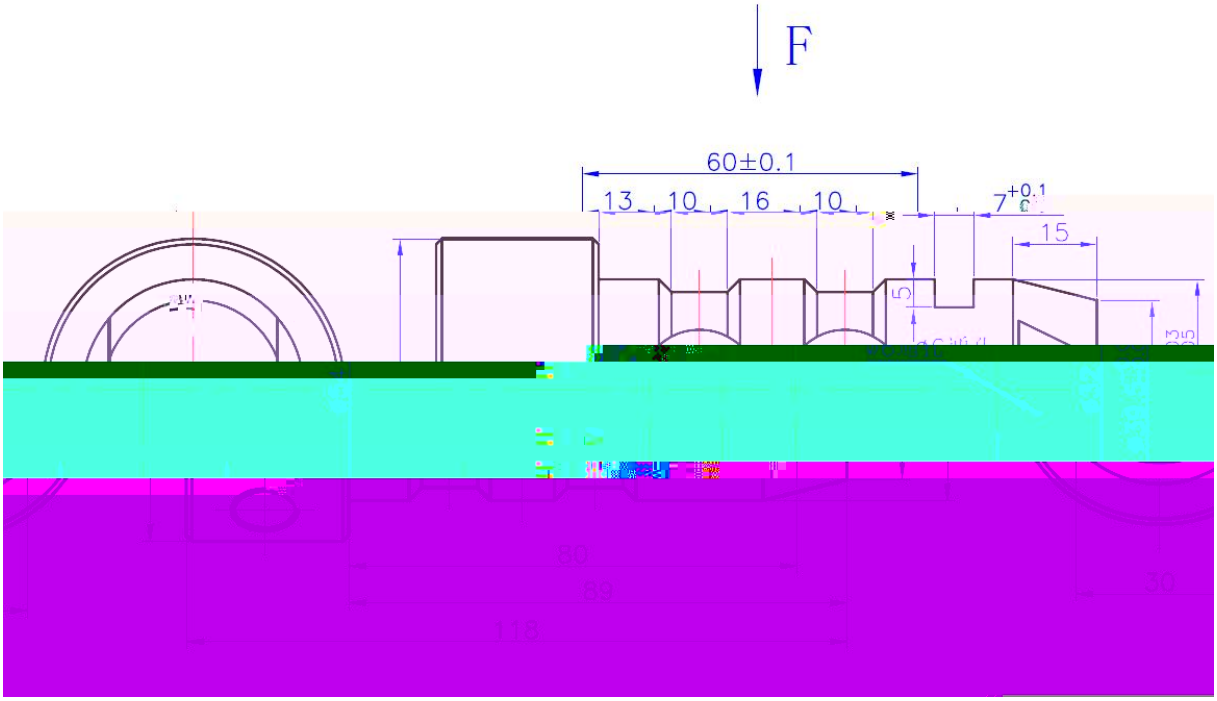

ZMHBX-3t

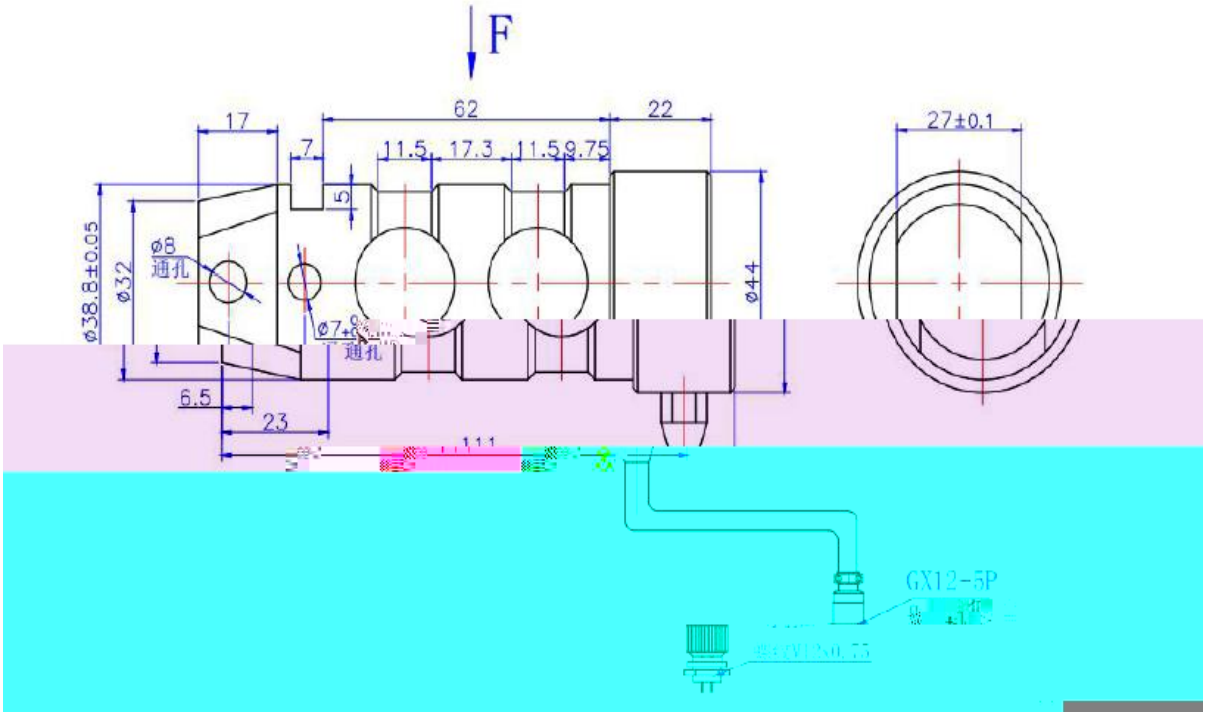

	3000 KG
mV/V	1.0mV/V
	0.5%F.S
	±0.05%F.S/30min
	-35 ~+70
Ω	370±20
Ω	350±3
	150%F.S
	10VDC

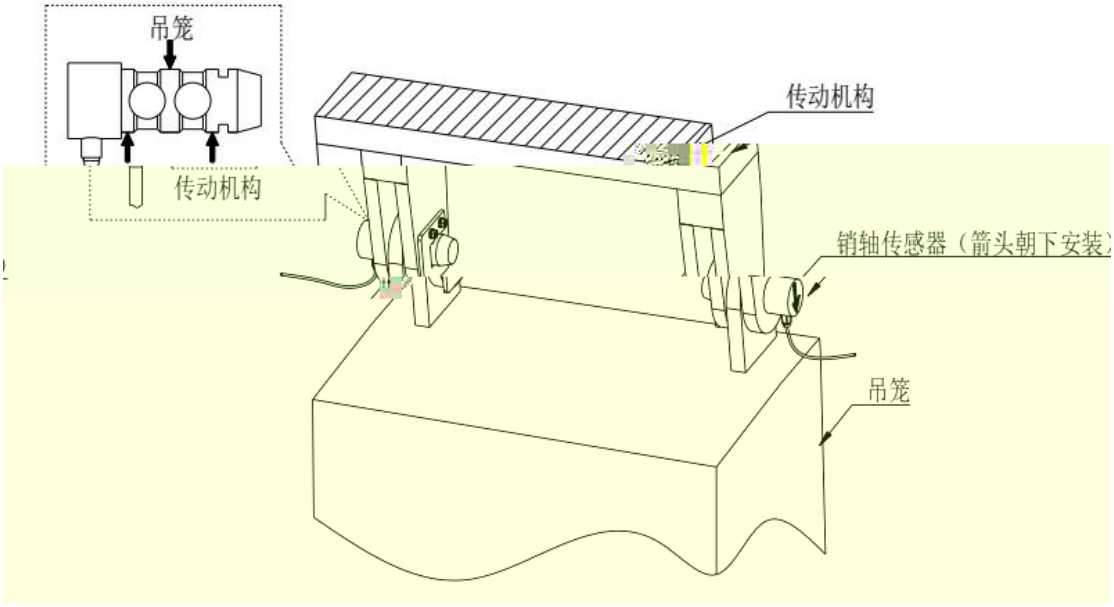
吊笼
传动机构
传动机构
销轴传感器（箭头朝下安装）
吊笼

A.5

1

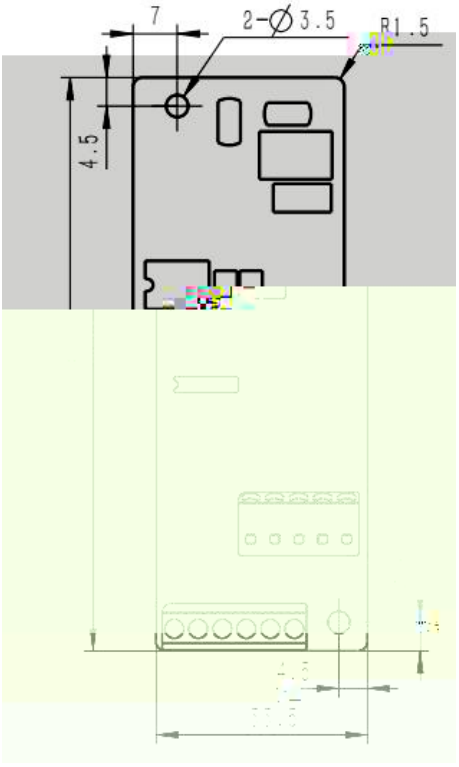

PG

2

+15V,GND		…	15V ± 5%	300mA
A+,A- B+,B- Z+,Z-		0-80kHz	0-15V	…

3

1

PG PG

+15V

+15V

2

PG 8

A+	A-	B+	B-	Z+	Z-

+15V	GND

+15V GND A+ A- B+ B- Z+ Z-

PE PE

3

PG

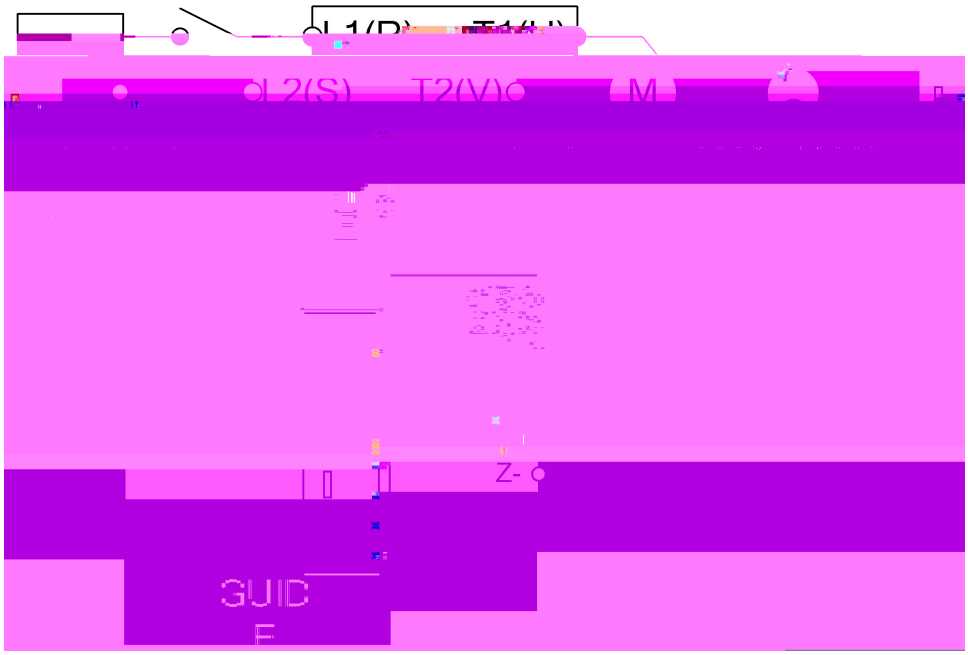

(1) PG

(2) PG

(3) PE

(4) PG A- B- Z- GND

A.6

1 GDHF-WPO3

2 4G GPR 1

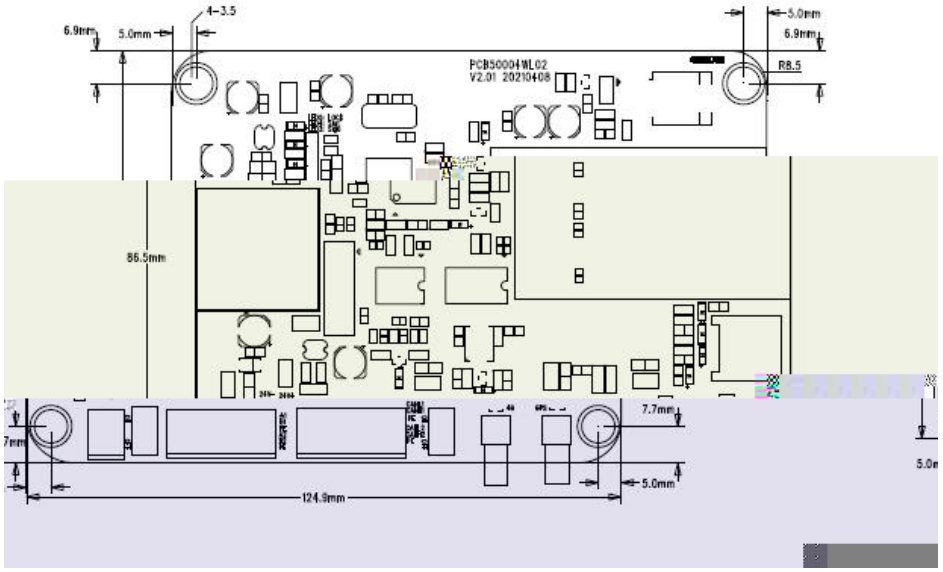

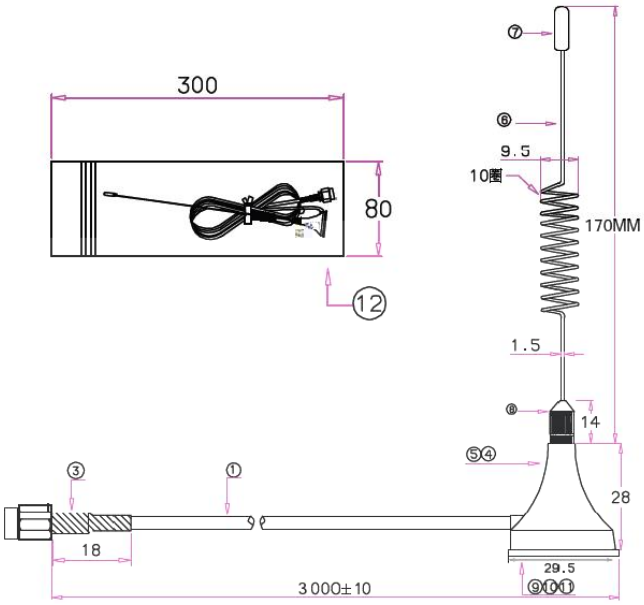

4G

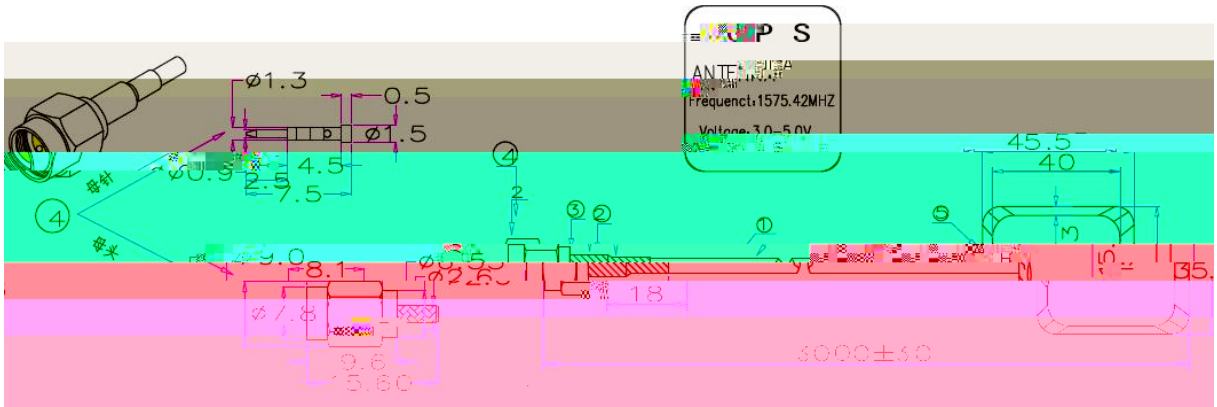

GPS

GSM

GSM

-

P28.36

-
-

GPS

- GPS

P28

P28.0		[0] [1] [2]	0 3	0
P28.1	_A	SIM 3	0 999	139
P28.2	_B	SIM 4	0 9999	0000
P28.3	_C	SIM 4	0 9999	0000
P28.4		[0] [1] + [2] + [3] + +	0 3	0
P28.5		VX.XX	0.00 10.00	1.00
P28.6	0_A	SIM 3	0 999	139
P28.7	0_B	SIM 4	0 9999	0000
P28.8	0_C	SIM 4	0 9999	0000
P28.9	1_A	SIM 3	0 999	139
P28.10	1_B	SIM 4	0 9999	0000
P28.11	1_C	SIM 4	0 9999	0000

...	...	...	...	...
P28.33	9_A	SIM	3	0 999	139
P28.34	9_B	SIM	4	0 9999	0000
P28.35	9_C	SIM	4	0 9999	0000
P28.36		Hz		0.0 5.0	5.0

10

11 13912345678

P28.06 – P28.35 10 11

3 4 4

13912345678

P28.06 139

P28.07 1234

P28.08 5678

1.

2. lock

3. Lock Done

4.

5.

6. unlock

7. unLock Done

8.

9.

10. state

11.

12. state:Lock(unLock)

13. Exxx Wxxx

14. GPS:+-DDDMM.MMMM +-DDMM.MMMM

15. Lock unLock

Exxx Wxxx 000

16. GPS:+-DDDMM.MMMM +-DDMM.MMMM

17. D GPS M

18. GPS GPS:No Signal

19.

20. GPS

21. gps

22. GPS:+-DDDMM.MMMM +-DDMM.MMMM

23. D GPS M

24. GPS GPS:No Signal

25. GPS

A.7

37kW

WBSJ2020-0312-2　　16Ω/25kW

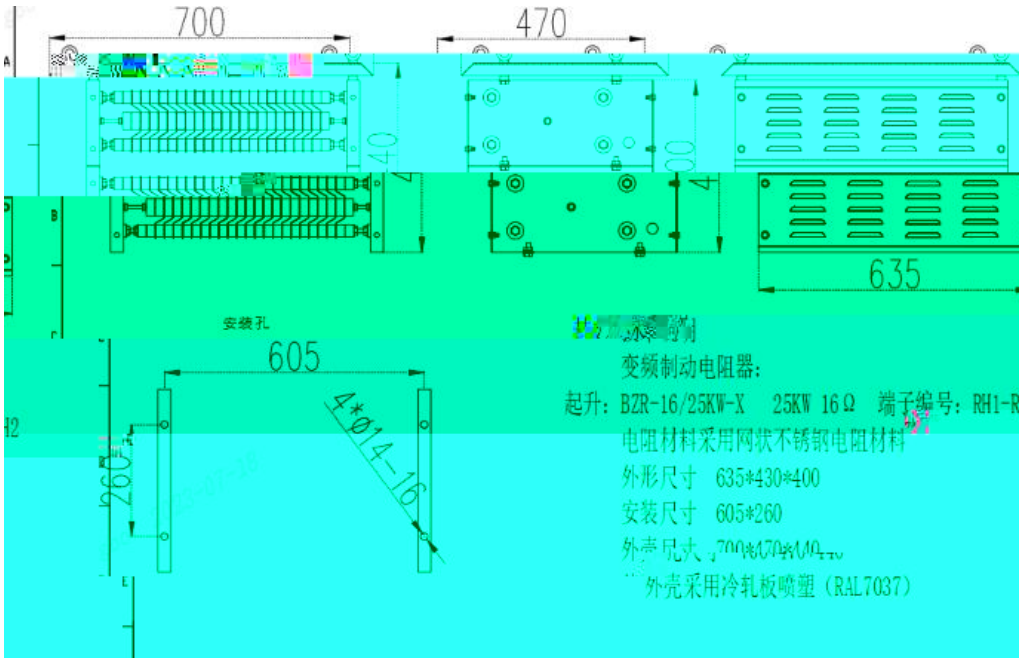

BZRL-15/25KW　　15Ω/25kW

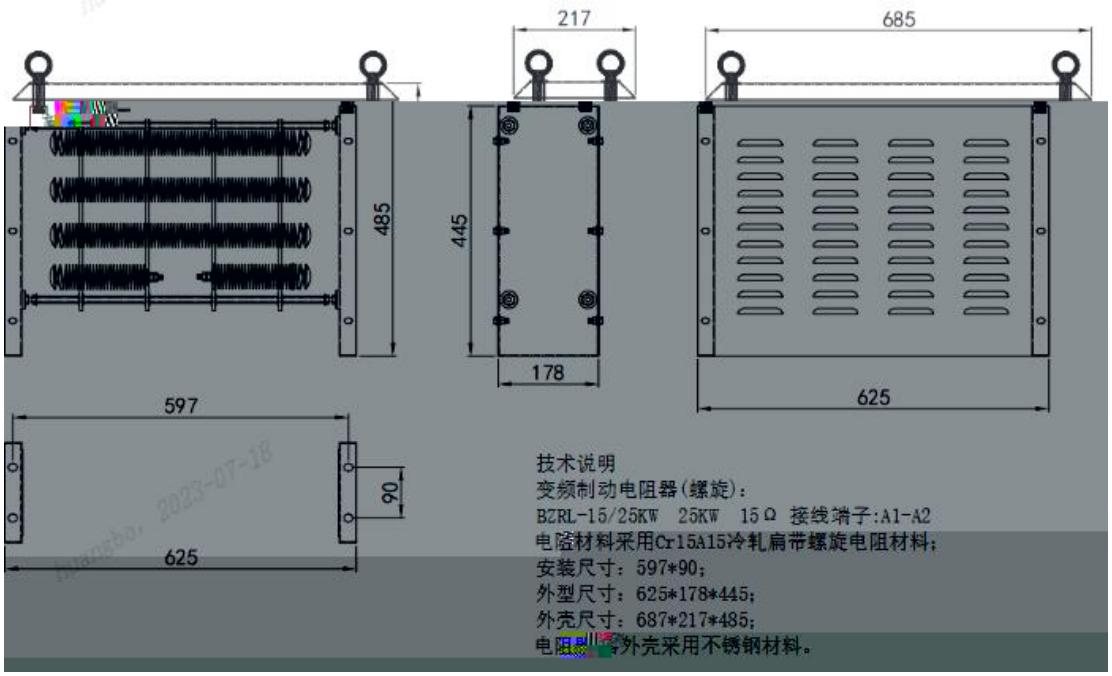

A.8

BZRL-15/25KW 10.10.A36.03.XS00

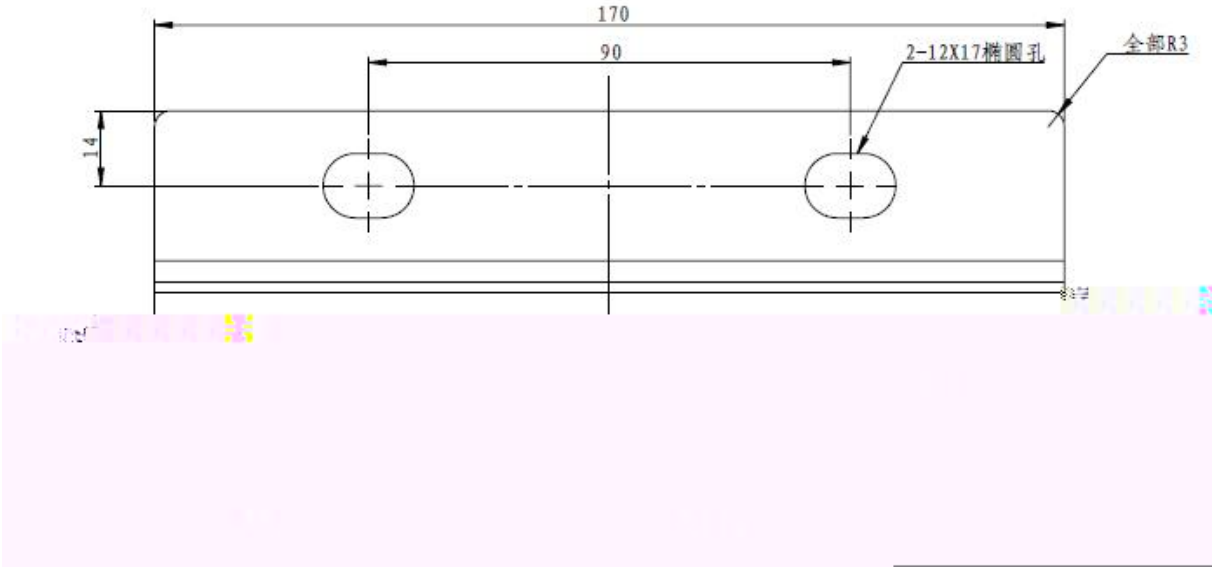

A.9

	WBSJ2020-0312-2	16Ω/25kW	22.10.A36.96.200	

B

B.1

3

1

1.1 ID

1.2

3 “ ” ID

ID

2

2.1

2.2

2.3

2.4

2.5

3

3.1

3.2

3.3

3.4

B.2

4





1 “ ”

“ ” “ ”

“ 123123 ” “ ”

2

“ OK ”

2 “ ESC ”

3 T9

4

5

6 “ ESC ” “ ” 8

B.3

1

/ 10

	→	
	10 →	

1

2

4

100 , “m " ” ǰ ɛ

	→	

2

10

B.4

1

2

a “ ” “ ” “

	4 4

3

2

a) ID ID ID 1~100

b)

c) “ ” “ ” “ ” 2

d) 2 4~8

e) 4 4

1

B.5

a) “ ” “ ”

b) “ ” ID “ ”

“ ” “ ” “

” “ ”

c) “ ” ID

B.6

“ ” “ ”

a)

b)

c)

d)

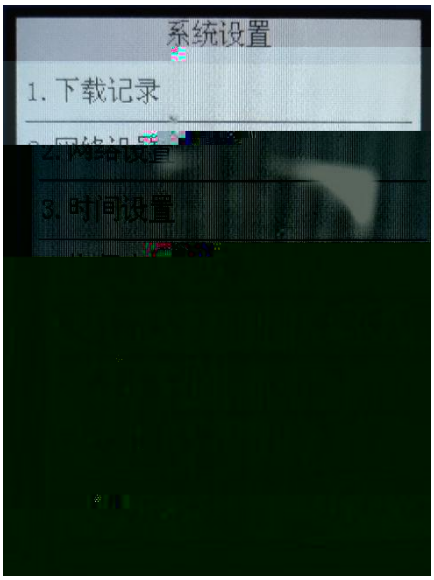

4

B.7

a) 1

b) 1 1

1 2

+1 1 …… “ ”

c)

d)

	“ ” →		“ ”

5

	“ ” →		“ ” →
	1 →		“ ”

6

1

2 “ ESP ”

证书编号：TSX 4000 016 2022 9012

特种设备型式试验证书

HF633N

1.03

1

2

3

Wuhan Guide Technology Co.,Ltd.

6

430223

86-027-87927230

shfw@gdetec.com

www.gdetec.com

400-0077-570

Wuhan Guide Technology Co.,Ltd.

GDHF633N-DOC-UM-REV1.03

2024.4